PRESTIGE®

Concealed Cistern

TRADE-FRIENDLY CONNECTIONS. MORE DESIGN CHOICE.

The plumber friendly pneumatic cistern for fast servicing and a wider choice of finishing options

Made to fit:

- Furniture
- Boxing-In



INSTALL WITH CONFIDENCE

- **Brass Inlet Connection -** Cross thread protection - Fits first time and simplifies future servicing

TIME SAVING

- **Factory-Assembled Unit -** Ready to mount straight out of the box

SITE ADAPTABLE

- **Flexible Access -** Service from the **front** or **top** depending on installation requirements

FINISH OPTIONS

- **Button & Flush Plate Options -** Fitted with a Dudley Niagara pneumatic outlet valve, allowing simple upgrades to any Dudley pneumatic push button or flush plate, including premium styles

WATER SAVING

- **Delay-Fill Dudley Hydroflo Inlet -** Prevents water entering the cistern during the flush to reduce consumption
- **Efficient Dual-Flush -** Delivers the right flush volume for the job and user needs
- **Flush Volume Options Supplied -** Convert easily between 6/4L and 5/3L dual-flush setups.

DIMENSIONAL DATA

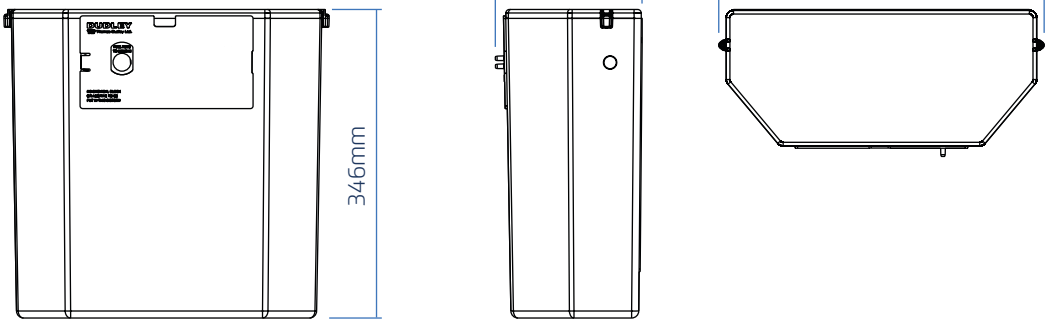

SPECIFICATION

Material (Cistern)	High Density Polystyrene (PS)
Service Access	Front and Top Access
Inlet	Dudley Hydroflo Delay-Fill Inlet Valve
Outlet	Dudley Niagara Pneumatic Oulet Valve
Flush Volume	6/4 & 5/3 Litre Dual Flush
Product Code	379502 - Prestige Concealed Cistern Brass Bottom Inlet: 73.5 mm Geo DF Button 379503 - Prestige Concealed Cistern Brass Side Inlet: 73.5 mm Geo DF Button

THOMAS DUDLEY