Dudley

OBC (PRESTIGE) CISTERN

FRONT ACCESS CONCEALED PNEUMATIC CISTERN

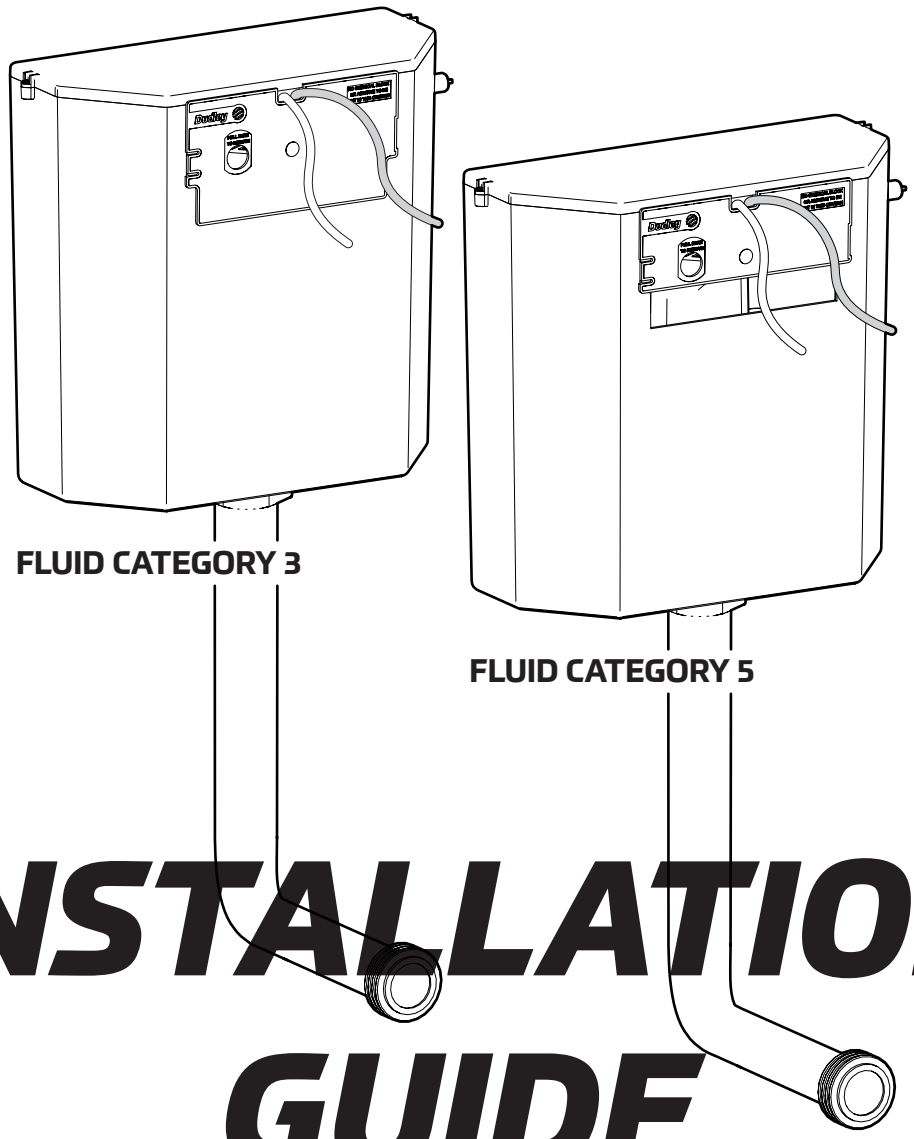

FLUID CATEGORY 3

FLUID CATEGORY 5

INSTALLATION GUIDE

Scan this QR code, provide some feedback and be entered in our monthly prise draw!

WRAS APPROVED PRODUCT

THOMAS DUDLEY TD

REFERENCE DIMENSIONS

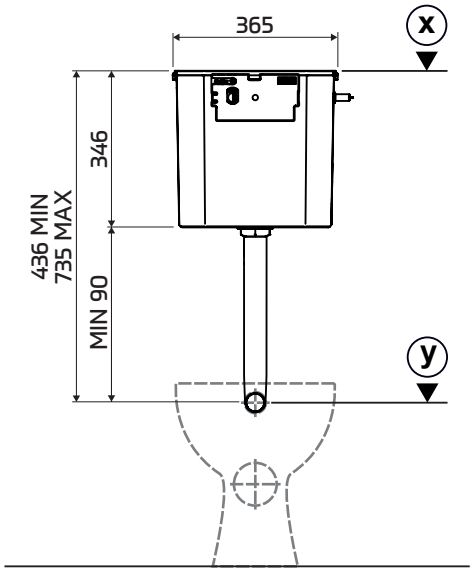

PUSH-FIT OUTLET MODELS

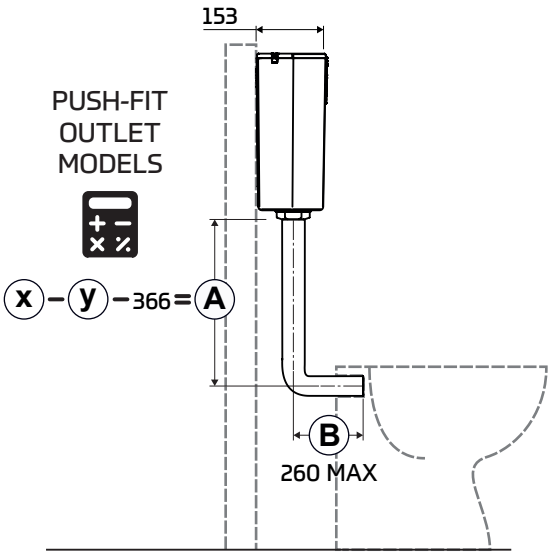

2" BSP OUTLET MODELS

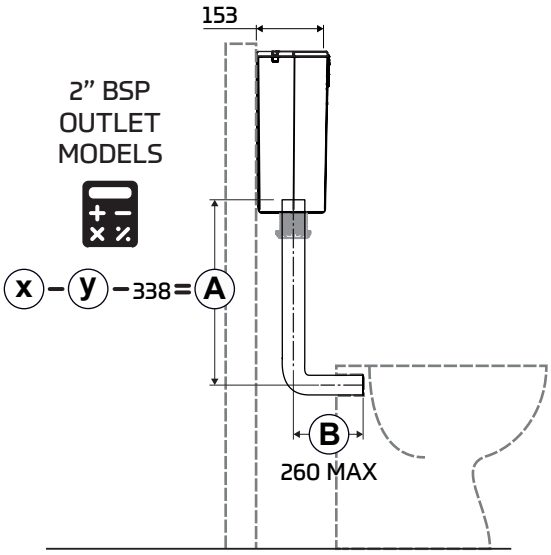

IMPORTANT NOTES

In addition to reference dimensions, allowance must be made for isolation valve, piping and button.

No sealing compound, paste, flux or solvent to be used in contact with plastic or rubber surfaces to avoid damage. Rubber washers will provide adequate seal. PTFE tape may be used on threads. Do not over tighten plastic nuts. No chemical block/ additive to be used in this cistern.

Installation to a masonry substrate shown for visual purposes. This procedure is transferable across other installation applications i.e. furniture. Ensure that suitable fixings are used for the required application.

1

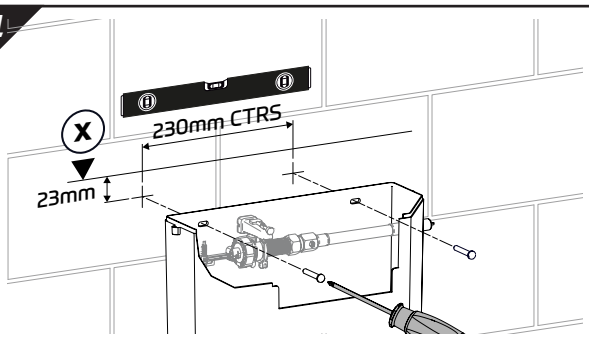

2

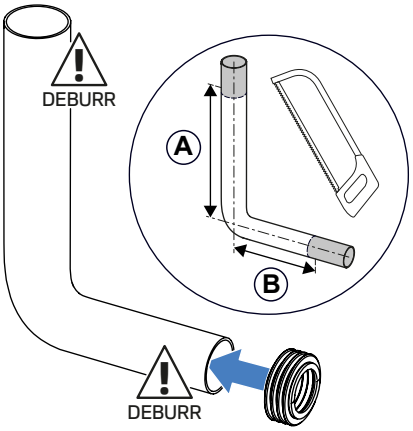

3a PUSH-FIT MODELS

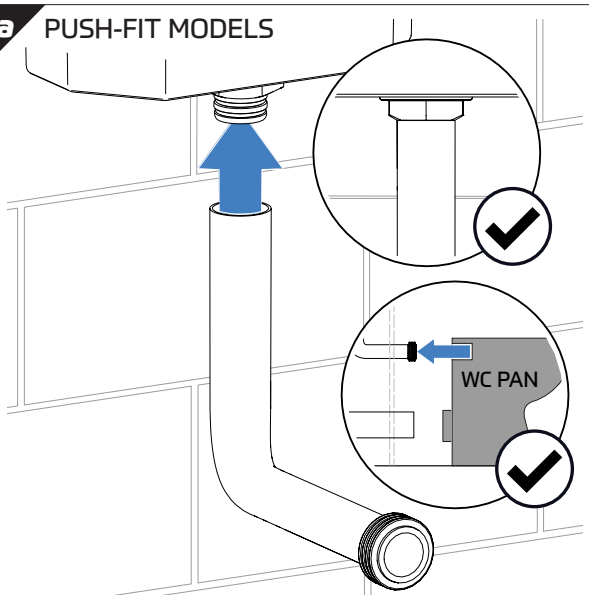

3b 2” BSP MODELS

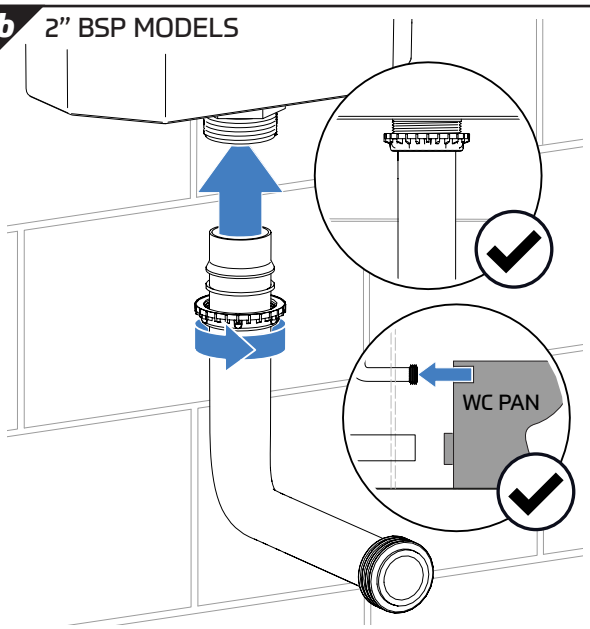

4

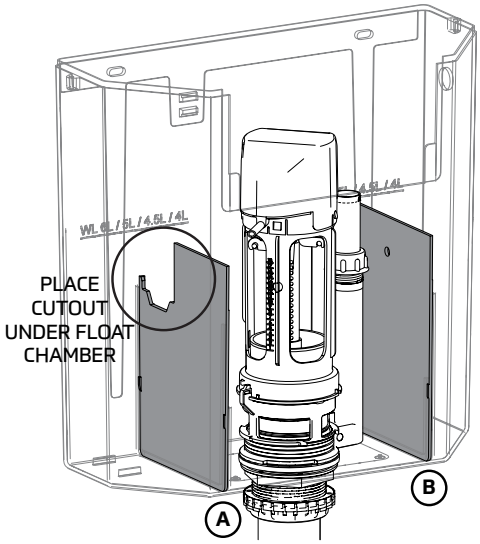

FULL FLUSH	PARTITION A	PARTITION B
6/4L	OUT	OUT
5/3L	OUT	IN
4/2.6L	IN	IN

5

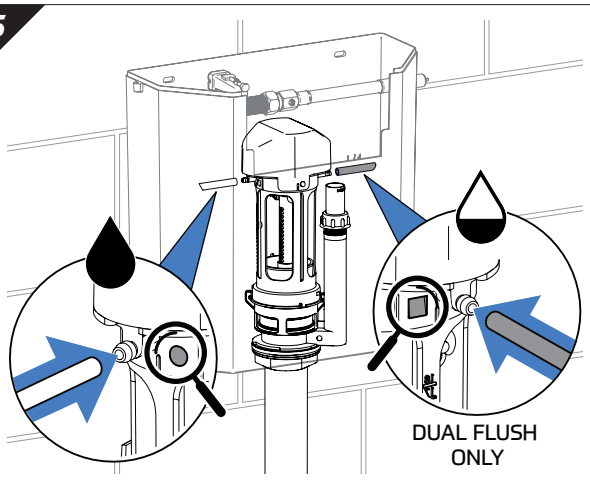

6a

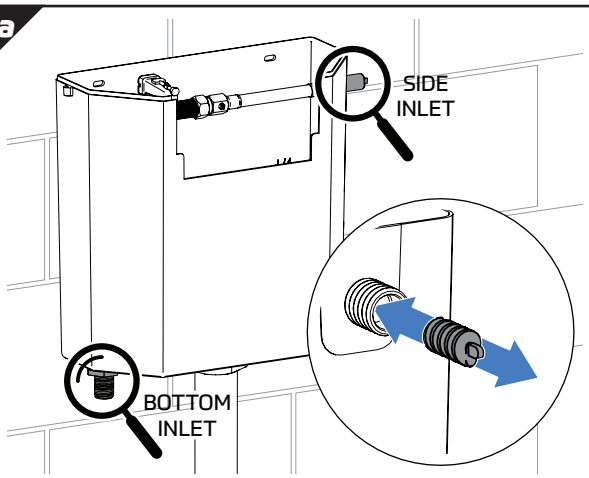

TYPE A	DO NOT REMOVE	
TYPE B	PRESSURE >1.5 bar	RETAIN
	PRESSURE <1.5 bar	REMOVE

7a 15mm PUSH-FIT INLET

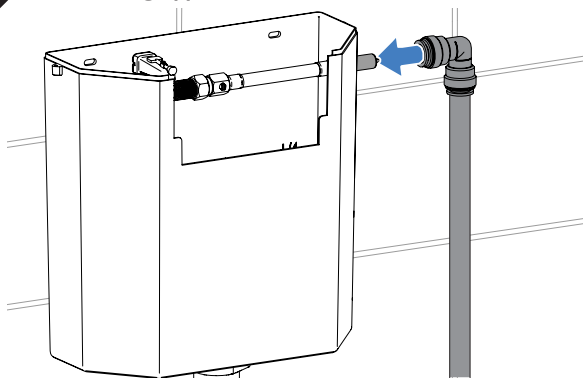

7b ½” BSP INLET

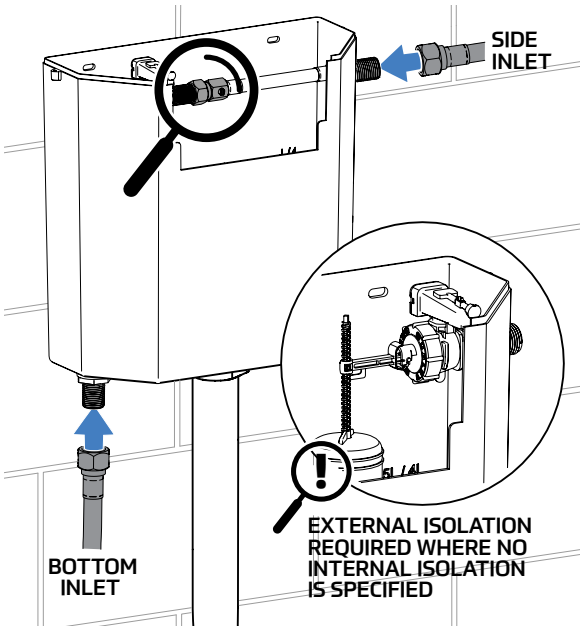

8 INTERNAL ISOLATION MODELS ONLY

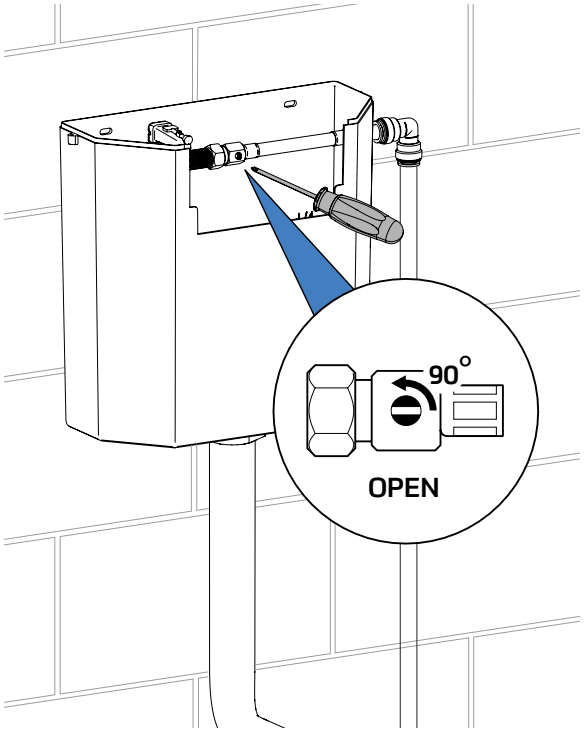

9

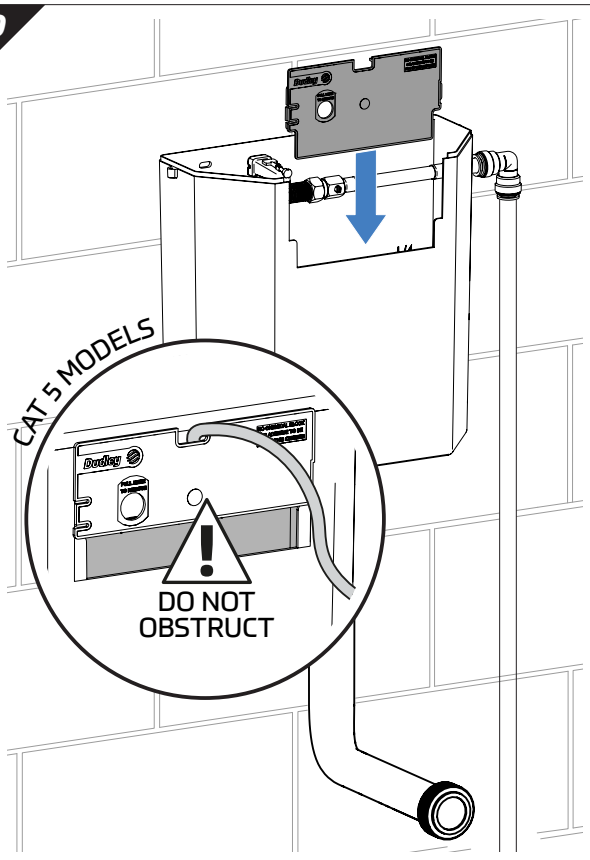

10

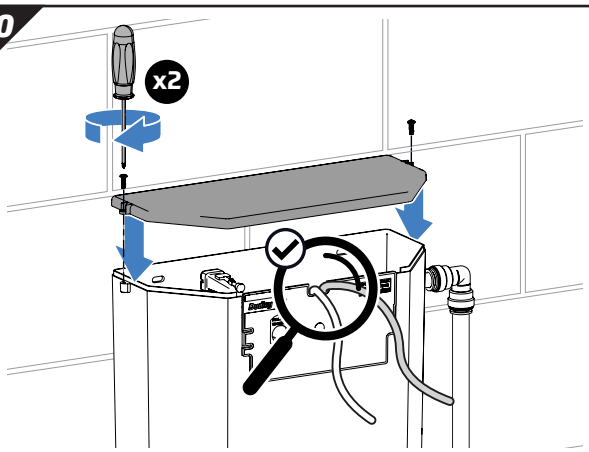

11 WATER LEVEL FINE ADJUST (IF REQUIRED)

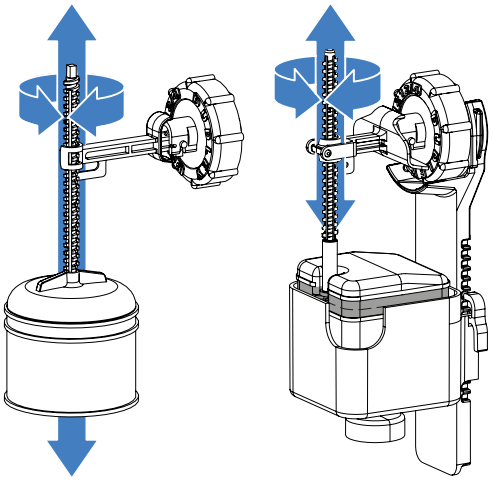

STANDARD FLOAT COMPACT FLOAT

12 Final Installation Checklist

- Check moving components are not obstructed and move freely.
- Check connections are secure and fixed correctly.
- Check installation for leaks.
- Check water level aligns to that marked within cistern, fine adjust if necessary (10).
- Hold the valve open (float down) to check overflow operation is sufficient.
- If the valve fails to shut off, the diaphragm & filter may require cleaning. Please refer to the Hydroflo service & maintenance guide online.
- Flush the cistern to check outlet valve operation.
- Visit **thomasdudley.co.uk/plumbing** for service & maintenance information.

© 2025 TD_SISLF375085_12253 Iss L

Thomas Dudley
295 Birmingham New Road
Dudley, West Midlands
United Kingdom
DY1 4SJ

t *+44 (0)121 557 5411*
f *+44 (0)121 557 5345*
e *info@thomasdudley.co.uk*
w *www.thomasdudley.co.uk/plumbing*

THOMAS DUDLEY TD