ELEMENT®

Concealed Cistern

RELIABLE PERFORMANCE. SIMPLE INSTALL.

A dependable concealed cistern that combines proven TD performance with everyday water saving.

Made to fit:

- Furniture Units
- Boxing-In



TIME SAVING

- **Factory-Assembled Unit -** Ready to mount straight out of the box

SITE ADAPTABLE

- **Flexible Access -** Service from the **front** or **top** depending on installation requirements

WATER SAVING

- **Delay-Fill Dudley Hydroflo Inlet -** Prevents water entering the cistern during the flush to reduce consumption
- **Efficient Dual-Flush -** Delivers the right flush volume for the job and user needs

DIMENSIONAL DATA

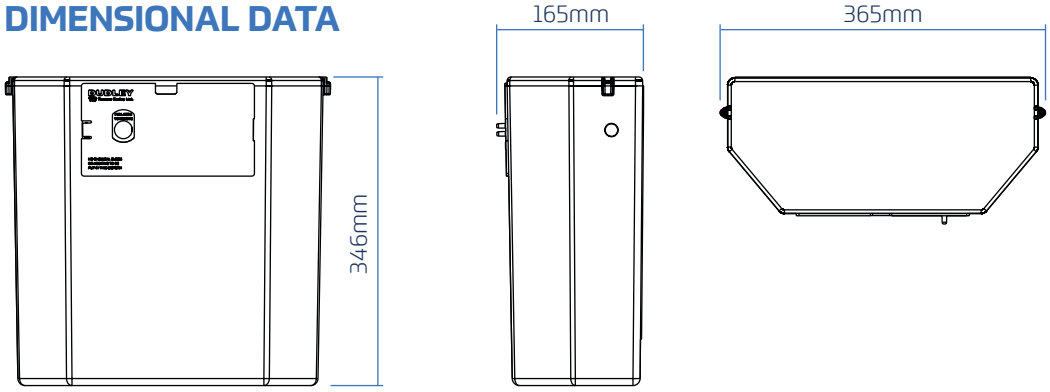

SPECIFICATION

Material (Cistern)	High Density Polystyrene (PS)
Service Access	Front and Top Access
Inlet	Dudley Hydroflo Delay-Fill Inlet Valve
Outlet	Dudley Victoria Cable Operated Oulet Valve
Flush Volume	6/4 Litre Dual Flush
Product Code	376724 - Element Concealed Cistern Bottom Inlet 375289 - Element Concealed Cistern Side Inlet

THOMAS DUDLEY